NVMe IP for Gen4/NVMeG4-IP demo instruction

Rev1.5 3-Aug-22

1 Overview

This document describes the instruction to run NVMe-IP for Gen4/NVMeG4-IP demo on FPGA development board. One NVMe SSD is accessed for running the demo. There are six commands that can run, i.e., Identify, Write, Read, SMART, Flush, and Shutdown command. User controls test operation via FPGA console.

After user finishes FPGA board setup following “dg_nvmeip_fpgasetup” document, main menu is displayed and the user sets the input to the console for selecting test operation.

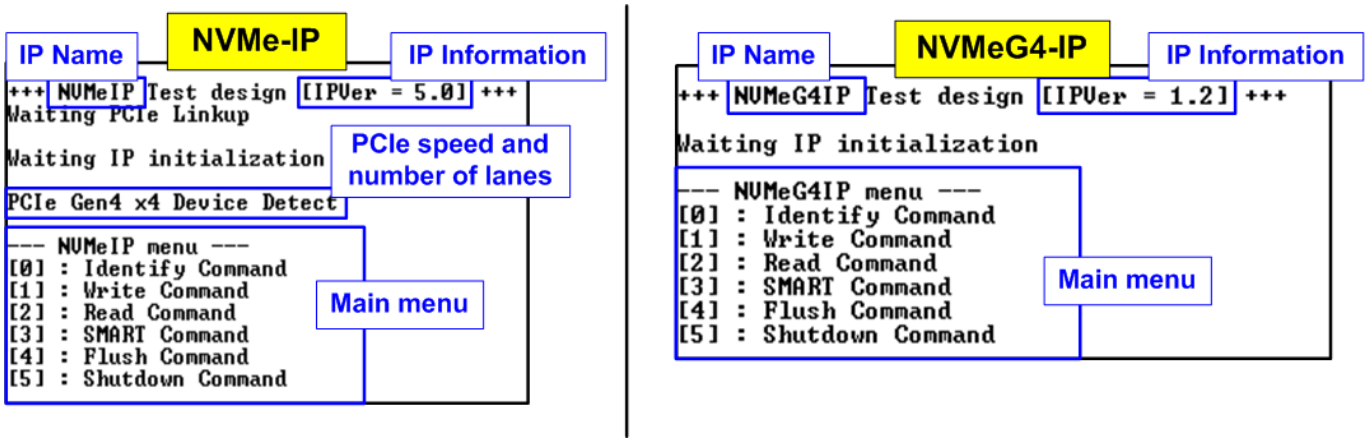

Figure 1-1 Main menu after finishing initialization

On welcome screen, IP name and IP version number are displayed. For standard IP (NVMe-IP), the PCIe speed and number of PCIe lanes are displayed after IP finishing initialization. While NVMeG4-IP does not display because only 4-lane PCIe Gen4 SSD is supported. Finally, the test menu is displayed on the console.

2 Test Menu

2.1 Identify Command

Select ‘0’ to send Identify command to NVMe SSD.

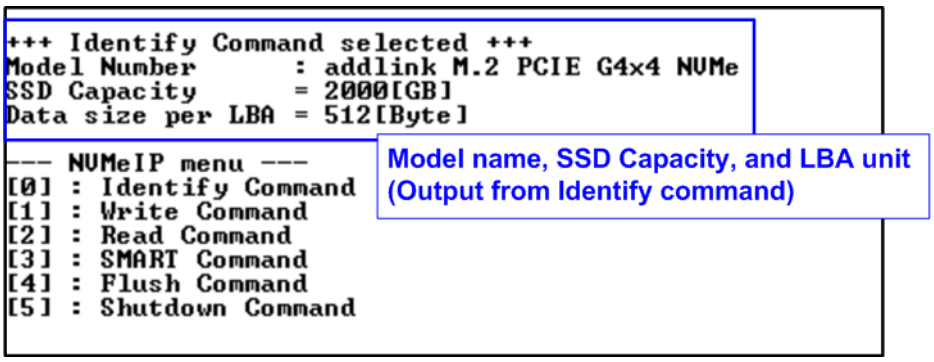

Figure 2-1 Test result when running Identify command

After finishing the operation, the SSD information output from Identify command is displayed. The console shows three values.

1) SSD model number : This value is decoded from Identify controller data.
2) SSD capacity : This value is signal output from NVMe(G4)-IP.
3) Data size per LBA : This value is signal output from NVMe(G4)-IP. Two values are supported, i.e., 512 byte and 4 Kbyte.

2.2 Write Command

Select '1' to send Write command to NVMe SSD.

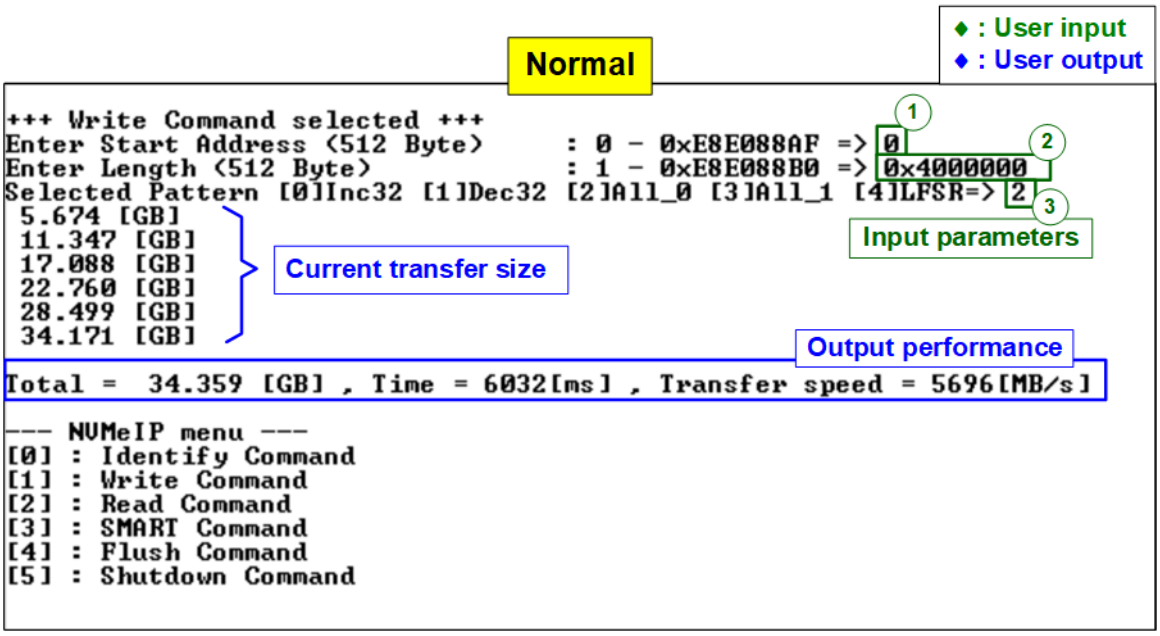

Figure 2-2 Input and test result when running Write command

User inputs three parameters as follows.

1) Start Address: Input start address to write SSD as 512-byte unit. The input is decimal unit when user inputs only digit number. User can add "0x" to be a prefix for hexadecimal unit. When LBA unit of SSD is 4 Kbyte, this input must be aligned to 8.
2) Transfer Length: Input total transfer size as 512-byte unit. The input is decimal unit when user inputs only digit number. User can add "0x" to be a prefix for hexadecimal unit. When LBA unit of SSD is 4 Kbyte, this input must be aligned to 8.
3) Test pattern: Select test data pattern for writing to SSD. There are five patterns, i.e., 32-bit incremental, 32-bit decremental, all 0, all 1, and 32-bit LFSR counter.

When all inputs are valid, the operation begins. While writing data, current amount of write data is displayed on the console every second to show that system is still alive. Finally, total size, total time usage, and test speed are displayed on the console as a test result.

Note:
Some SSDs shows slower performance after writing large size data to SSD. It needs to recover SSD performance by filling zero pattern or using Format command which is customized command. Please contact our sales for more information if Format command is required.

Test data of 32-bit increment pattern

64-bit header of each 512-byte

48-bit address (512 byte unit) | 0x0000 | Test data (32-bit increment)

Offset	0	1	2	3	4	5	6	7	8	9	A	B	C	D	E	F
00000000	00	00	00	00	00	00	00	00	02	00	00	00	03	00	00	00
00000010	04	00	00	00	05	00	00	00	06	00	00	00	07	00	00	00
00000020	08	00	00	00	09	00	00	00	0A	00	00	00	0B	00	00	00
00000030	0C	00	00	00	0D	00	00	00	0E	00	00	00	0F	00	00	00
00000040	10	00	00	00	11	00	00	00	12	00	00	00	13	00	00	00
00000050	14	00	00	00	15	00	00	00	16	00	00	00	17	00	00	00
00000060	18	00	00	00	19	00	00	00	1A	00	00	00	1B	00	00	00
				00	1D	00	00	00	1E	00	00	00	1F	00	00	00
				00	21	00	00	00	22	00	00	00	23	00	00	00
00000090	24	00	00	00	25	00	00	00	26	00	00	00	27	00	00	00
000000A0	28	00	00	00	29	00	00	00	2A	00	00	00	2B	00	00	00
000000B0	2C	00	00	00	2D	00	00	00	2E	00	00	00	2F	00	00	00
000000C0	30	00	00	00	31	00	00	00	32	00	00	00	33	00	00	00
000000D0	34	00	00	00	35	00	00	00	36	00	00	00	37	00	00	00
000000E0	38	00	00	00	39	00	00	00	3A	00	00	00	3B	00	00	00
000000F0	3C	00	00	00	3D	00	00	00	3E	00	00	00	3F	00	00	00
00000100	40	00	00	00	41	00	00	00	42	00	00	00	43	00	00	00
00000110	44	00	00	00	45	00	00	00	46	00	00	00	47	00	00	00
00000120	48	00	00	00	49	00	00	00	4A	00	00	00	4B	00	00	00
00000130	4C	00	00	00	4D	00	00	00	4E	00	00	00	4F	00	00	00
00000140	50	00	00	00	51	00	00	00	52	00	00	00	53	00	00	00
00000150	54	00	00	00	55	00	00	00	56	00	00	00	57	00	00	00
00000160	58	00	00	00	59	00	00	00	5A	00	00	00	5B	00	00	00
00000170	5C	00	00	00	5D	00	00	00	5E	00	00	00	5F	00	00	00
00000180	60	00	00	00	61	00	00	00	62	00	00	00	63	00	00	00
00000190	64	00	00	00	65	00	00	00	66	00	00	00	67	00	00	00
000001A0	68	00	00	00	69	00	00	00	6A	00	00	00	6B	00	00	00
000001B0	6C	00	00	00	6D	00	00	00	6E	00	00	00	6F	00	00	00
000001C0	70	00	00	00	71	00	00	00	72	00	00	00	73	00	00	00
000001D0	74	00	00	00	75	00	00	00	76	00	00	00	77	00	00	00
000001E0	78	00	00	00	79	00	00	00	7A	00	00	00	7B	00	00	00
000001F0	7C	00	00	00	7D	00	00	00	7E	00	00	00	7F	00	00	00
00000200	01	00	00	00	00	00	00	00	82	00	00	00	83	00	00	00
				00	85	00	00	00	86	00	00	00	87	00	00	00
				00	89	00	00	00	8A	00	00	00	8B	00	00	00

The 1st 512-byte data

The 2nd 512-byte data

64-bit header

Test data of 32-bit LFSR pattern

64-bit header of each 512-byte

48 bit address | 0x0000 | Test data (32-bit LFSR)

0	1	2	3	4	5	6	7	8	9	A	B	C	D	E	F
00	00	00	00	00	00	00	00	01	00	FE	FF	FF	FF	01	00
02	00	FC	FF	FF	FF	03	00	04	00	F8	FF	FF	FF	07	00
09	00	F0	FF	FF	FF	0F	00	12	00	E0	FF	FF	FF	1F	00
24	00	C0	FF	FF	FF	3F	00	48	00	80	FF	FE	FF	7F	00
90	00	00	FF	FD	FF	FF	00	20	01	00	FE	FB	FF	FF	01
40	02	00	FC	F6	FF	FF	03	80	04	00	F8	ED	FF	FF	07
00	09	00	F0	DB	FF	FF	0F	00	12	00	E0	B6	FF	FF	1F
00	24	00	C0	6D	FF	FF	3F	00	48	00	80	DB	FE	FF	7F
00	90	00	00	B6	FD	FF	FF	01	20	01	00	6C	FB	FF	FF
02	40	02	00	D9	F6	FF	FF	04	80	04	00	B2	ED	FF	FF
09	00	09	00	64	DB	FF	FF	12	00	12	00	C9	B6	FF	FF
24	00	24	00	92	6D	FF	FF	48	00	48	00	24	DB	FE	FF
91	00	90	00	49	B6	FD	FF	22	01	20	01	92	6C	FB	FF
45	02	40	02	24	D9	F6	FF	8A	04	80	04	49	B2	ED	FF
14	09	00	09	92	64	DB	FF	29	12	00	12	25	C9	B6	FF
52	24	00	24	4A	92	6D	FF	A4	48	00	48	94	24	DB	FE
49	91	00	90	28	49	B6	FD	93	22	01	20	51	92	6C	FB
27	45	02	40	A2	24	D9	F6	4F	8A	04	80	45	49	B2	ED
9E	14	09	00	8A	92	64	DB	3C	29	12	00	14	25	C9	B6
79	52	24	00	28	4A	92	6D	F3	A4	48	00	51	94	24	DB
E7	49	91	00	A2	28	49	B6	CF	93	22	01	45	51	92	6C
9E	27	45	02	8A	A2	24	D9	3C	4F	8A	04	14	45	49	B2
79	9E	14	09	28	8A	92	64	F2	3C	29	12	51	14	25	C9
E5	79	52	24	A2	28	4A	92	CA	F3	A4	48	45	51	94	24
95	E7	49	91	8A	A2	28	49	2B	CF	93	22	15	45	51	92
57	9E	27	45	2B	8A	A2	24	AE	3C	4F	8A	56	14	45	49
5D	79	9E	14	AC	28	8A	92	BA	F2	3C	29	58	51	14	25
75	E5	79	52	B1	A2	28	4A	EB	CA	F3	A4	63	45	51	94
D7	95	E7	49	C6	8A	A2	28	AE	2B	CF	93	8D	15	45	51
5D	57	9E	27	1A	2B	8A	A2	BA	AE	3C	4F	35	56	14	45
75	5D	79	9E	6A	AC	28	8A	EA	BA	F2	3C	D4	58	51	14
D5	75	E5	79	A9	B1	A2	28	AB	EB	CA	F3	53	63	45	51
01	00	00	00	00	00	00	00	02	00	FE	FF	FC	FF	01	00
04	00	FC	FF	F9	FF	03	00	09	00	F8	FF	F2	FF	07	00
12	00	F0	FF	E4	FF	0F	00	24	00	E0	FF	C9	FF	1F	00

64-bit header

Figure 2-3 Example Test data of the 1st and 2nd 512 byte by using increment/LFSR pattern

Test data in SSD is split into 512-byte unit. For incremental, decremental, and LFSR pattern, each 512-byte data has unique 64-bit header consisting of 48-bit address (in 512-byte unit) and 16-bit zero value. The data after 64-bit header is the test pattern which is selected by user.

The left window of Figure 2-3 shows the example when using 32-bit incremental pattern while the right window shows the example when using 32-bit LFSR pattern. The unique header is not included when running all-0 or all-1 pattern.

When user runs Write or Read command with 4-Kbyte LBA SSD, there is the message displayed on the console to show the input limitation which must be aligned to 8 as shown in Figure 2-4. When the input is not aligned to 8, “Invalid input” is displayed and the operation is cancelled.

Figure 2-5 shows the example when the input is out of the recommended range for each parameter. The console displays “Invalid input” and then the operation is cancelled.

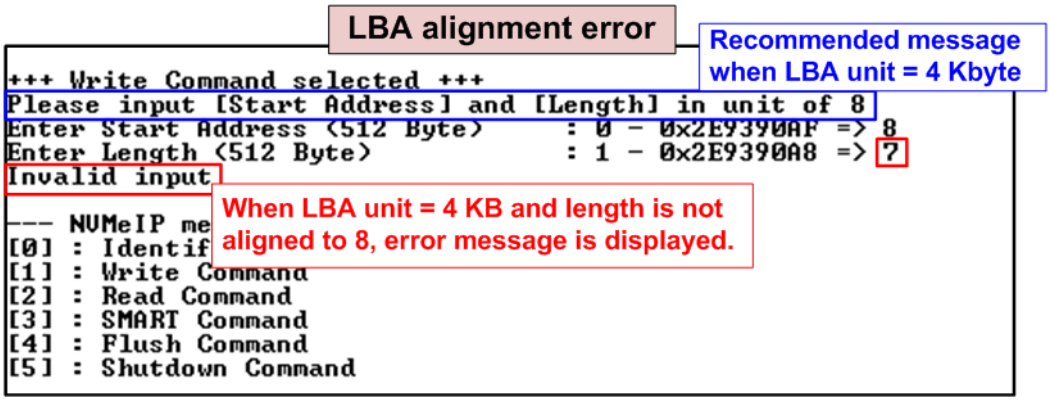

Figure 2-4 Error message when the input is unaligned for 4-Kbyte LBA SSD

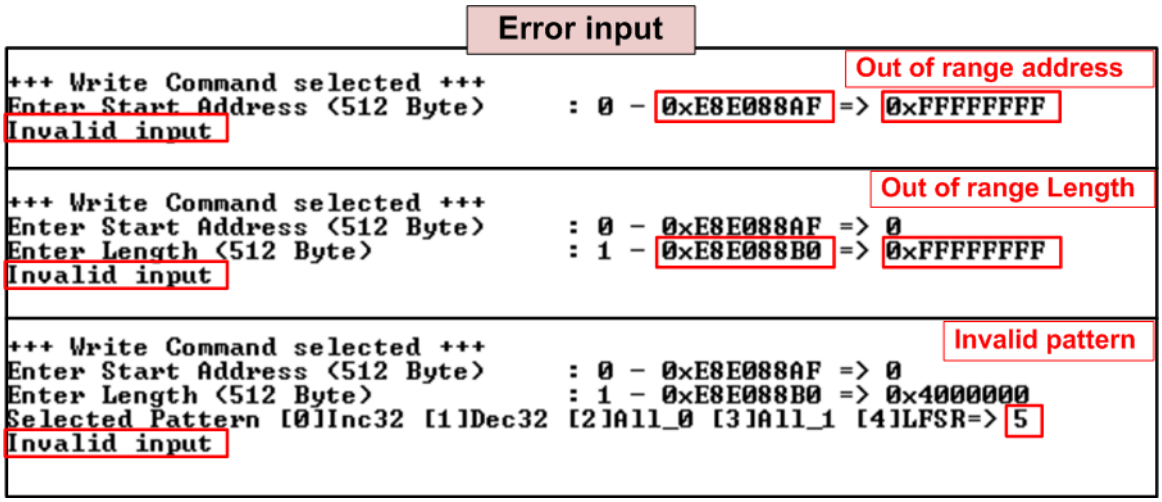

Figure 2-5 Error message from the invalid input

2.3 Read Command

Select ‘2’ to send Read command to NVMe SSD.

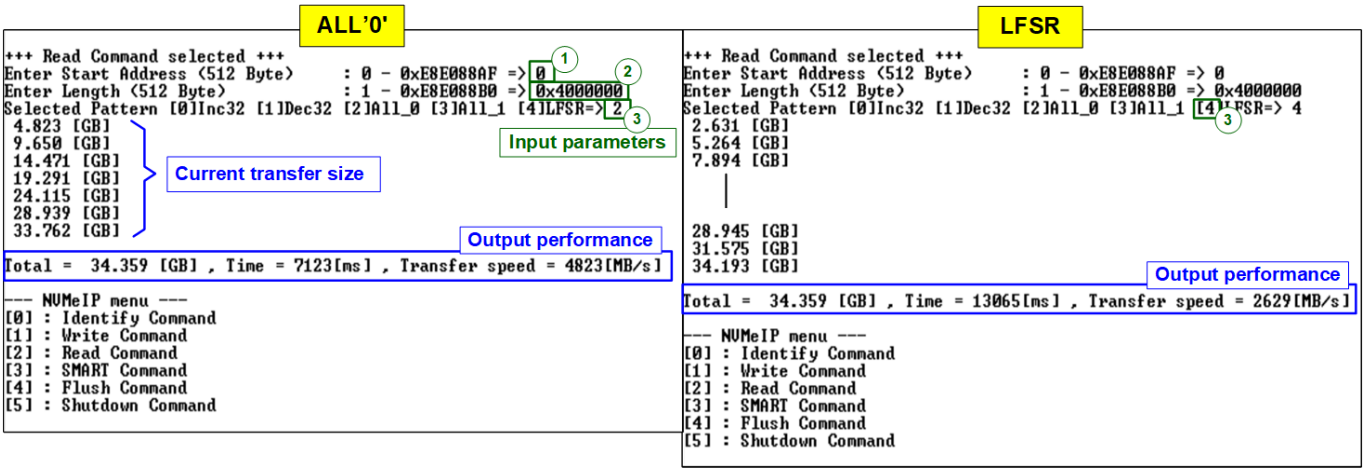

Figure 2-6 Input and test result when running Read Command

User inputs three parameters as follows.

1) Start Address: Input start address to read SSD as 512-byte unit. The input is decimal unit when user inputs only digit number. User can add “0x” to be a prefix for hexadecimal unit. When LBA unit of SSD is 4 Kbyte, this input must be aligned to 8.
2) Transfer Length: Input total transfer size as 512-byte unit. The input is decimal unit when user inputs only digit number. User can add “0x” to be a prefix for hexadecimal unit. When LBA unit of SSD is 4 Kbyte, this input must be aligned to 8.
3) Test pattern: Select test data pattern to verify data from SSD. Test pattern must be matched with the pattern using in Write Command menu. There are five patterns, i.e., 32-bit incremental, 32-bit decremental, all 0, all 1, and 32-bit LFSR counter.

Similar to Write command menu, test system reads data from SSD when all inputs are valid. While reading data, current amount of read data is displayed on the console every second to show that system is still alive. Total size, total time usage, and test speed are displayed after finishing the operation.

“Invalid input” is displayed when some inputs are invalid or unaligned to 8 (when connecting to 4-KB LBA SSD).

Note:

1) Some SSDs shows the different performance when changing test pattern. As shown in Figure 2-6, the best read performance is achieved by using all-zero pattern. While the performance is reduced when using LFSR pattern.

2) When using customized IPcore which extends the buffer size to 1 Mbyte instead of 256 Kbyte, the read performance is increased to 6396 Mbyte/s as shown in Figure 2-7.

ALL '0' by 1 Mbyte buffer

```
+++ Read Command selected +++
Enter Start Address (512 Byte)      : 0 - 0xE8E088AF => 0
Enter Length (512 Byte)             : 1 - 0xE8E088B0 => 0x4000000
Selected Pattern [0]Inc32 [1]Dec32 [2]All_0 [3]All_1 [4]LFSR=> 2
 6.393 [GB]
 12.790 [GB]
 19.188 [GB]
 25.586 [GB]
 31.984 [GB]

Total =  34.359 [GB] , Time = 5371[ms] , Transfer speed = 6396[MB/s]
```

Output performance

Figure 2-7 Test result when running Read command by customized IP (1 Mbyte buffer)

Figure 2-8 shows error message when data verification is failed. "Verify fail" is displayed with the information of the 1st failure data, i.e., the error byte address, the expected value, and the read value.

User can press any key(s) to cancel read operation. Otherwise, the operation is still run until finishing Read command. After that, the output performance is displayed on the console.

When cancelling the operation, the Read command still runs as the background and may not finish in a good sequence. It is recommended to power-off/on FPGA board and adapter board (if connected).

Verification error without cancellation

```
+++ Read Command selected +++
Enter Start Address (512 Byte)      : 0 - 0xE8E088AF => 0
Enter Length (512 Byte)             : 1 - 0xE8E088B0 => 0x4000000
Selected Pattern [0]Inc32 [1]Dec32 [2]All_0 [3]All_1 [4]LFSR=> 1

Verify fail
1st Error at Byte Addr = 0x00000000
Expect Data[255:128]   = 0xFFFFFFF8_FFFFFFF9_FFFFFFFA_FFFFFFFB
Expect Data[127:  0]   = 0xFFFFFFFC_FFFFFFFD_00000000_00000000
Read Data[255:128]     = 0x00000000_00000000_00000000_00000000
Read Data[127:  0]     = 0x00000000_00000000_00000000_00000000
Press any key to cancel operation
 4.774 [GB]
 9.552 [GB]
 14.332 [GB]
 19.110 [GB]
 23.888 [GB]
 28.666 [GB]
 33.443 [GB]

Total =  34.359 [GB] , Time = 7191[ms] , Transfer speed = 4777[MB/s]

--- NVMeIP menu ---
[0] : Identify Command
[1] : Write Command
[2] : Read Command
[3] : SMART Command
[4] : Flush Command
[5] : Shutdown Command
```

Wrong pattern

Message when verification is failed

Output performance

Verification error with cancellation

```
+++ Read Command selected +++
Enter Start Address (512 Byte)      : 0 - 0xE8E088AF => 0
Enter Length (512 Byte)             : 1 - 0xE8E088B0 => 0x4000000
Selected Pattern [0]Inc32 [1]Dec32 [2]All_0 [3]All_1 [4]LFSR=> 1

Verify fail
1st Error at Byte Addr = 0x00000000
Expect Data[255:128]   = 0xFFFFFFF8_FFFFFFF9_FFFFFFFA_FFFFFFFB
Expect Data[127:  0]   = 0xFFFFFFFC_FFFFFFFD_00000000_00000000
Read Data[255:128]     = 0x00000000_00
Read Data[127:  0]     = 0x00000000_00
Press any key to cancel operation
 4.776 [GB]
Operation is cancelled
Please reset system before starting a new test

--- NVMeIP menu ---
[0] : Identify Command
[1] : Write Command
[2] : Read Command
[3] : SMART Command
[4] : Flush Command
[5] : Shutdown Command
```

User enters some keys to cancel the operation

Message when operation is cancelled

Figure 2-8 Data verification is failed

2.4 SMART Command

Select ‘3’ to send SMART command to NVMe SSD.

```
+++ SMART Command selected +++

<< Health Status >>
Remaining Life   : 91%

<< SMART Log Information >>
Percentage Used                  : 9%
Temperature                      : 29 Degree Celsius
Total Data Read                  : 131062 GB
Total Data Read (Raw data)       : 0x00000000_00000000_00000000_0F41BB11
Total Data Written               : 146475 GB
Total Data Written (Raw data)    : 0x00000000_00000000_00000000_110D0A6E
Power On Cycles                  : 713 Times
Power On Hours                   : 78 Hours
Unsafe Shutdowns                 : 410 Times

SMART Command Complete

--- NVMeIP menu ---
[0] : Identify Command
[1] : Write Command
[2] : Read Command
[3] : SMART Command
[4] : Flush Command
[5] : Shutdown Command
```

Data output decoded from SMART command

Figure 2-9 Test result when running SMART command

After finishing the operation, SMART/Health Information (output from SMART command) is be displayed as shown in Figure 2-9. The console shows Health status and SMART log information. Health status shows the remaining life of the SSD in percent unit which is calculated from Percentage Used in the SMART log information.

The SMART log information shows seven parameters as follows.

1) Percentage used: Display SSD usage in percent unit.
2) Temperature in °C unit.
3) Total Data Read decoded as GB/TB unit. Also, raw data without decoding is displayed by 32 digits of hex number (128 bits). The unit size of raw data is 512,000 bytes.
4) Total Data Written decoded as GB/TB unit. Also, raw data without decoding is displayed by 32 digits of hex number (128 bits). The unit size of raw data is 512,000 bytes.
5) Power On Cycles: Display the number of power cycles.
6) Power On Hours: Display the period of time in hours to show how long the SSD has been powered on.
7) Unsafe Shutdowns: Display the number of unsafe shutdowns of SSD.

2.5 Flush Command

Select ‘4’ to send Flush command to NVMe SSD.

```
+++ Flush Command selected +++

Flush Command Complete

--- NVMeIP menu ---
[0] : Identify Command
[1] : Write Command
[2] : Read Command
[3] : SMART Command
[4] : Flush Command
[5] : Shutdown Command
```

Message after finishing the operation

Figure 2-10 Test result when running Flush command

“Flush Command Complete” is displayed after finishing Flush operation.

2.6 Shutdown Command

Select ‘5’ to send Shutdown command to NVMe SSD.

```
--- NVMeIP menu ---
[0] : Identify Command
[1] : Write Command
[2] : Read Command
[3] : SMART Command
[4] : Flush Command
[5] : Shutdown Command

+++ Shutdown Command selected +++
Are you sure you want to shutdown the device now ?
Press 'y' to confirm : y

Shutdown command is complete
The device has turned off...
```

Confirmation massage

Press ‘y’ to confirm

Last message before the IP and SSD are inactive

Figure 2-11 Shutdown Command with confirmation

The confirmation message is displayed on the console. User enters ‘y’ or ‘Y’ to continue the operation or enters other keys to cancel the operation.

After finishing Shutdown operation, “Shutdown command is complete” is displayed on the console as the last message. Main menu is not displayed anymore. User needs to power off/on test system to start new test operation.

3 Revision History

Revision	Date	Description
1.5	3-Aug-22	Update read performance by 1 Mbyte buffer
1.4	14-Sep-21	Support NVMe-IP for Gen4
1.3	20-Jul-21	Update SMART info and test performance
1.2	21-Dec-20	Remove FPGA setup from the document
1.1	20-Apr-20	Remove power adapter cable from AB18
1.0	29-Jan-20	Initial version release